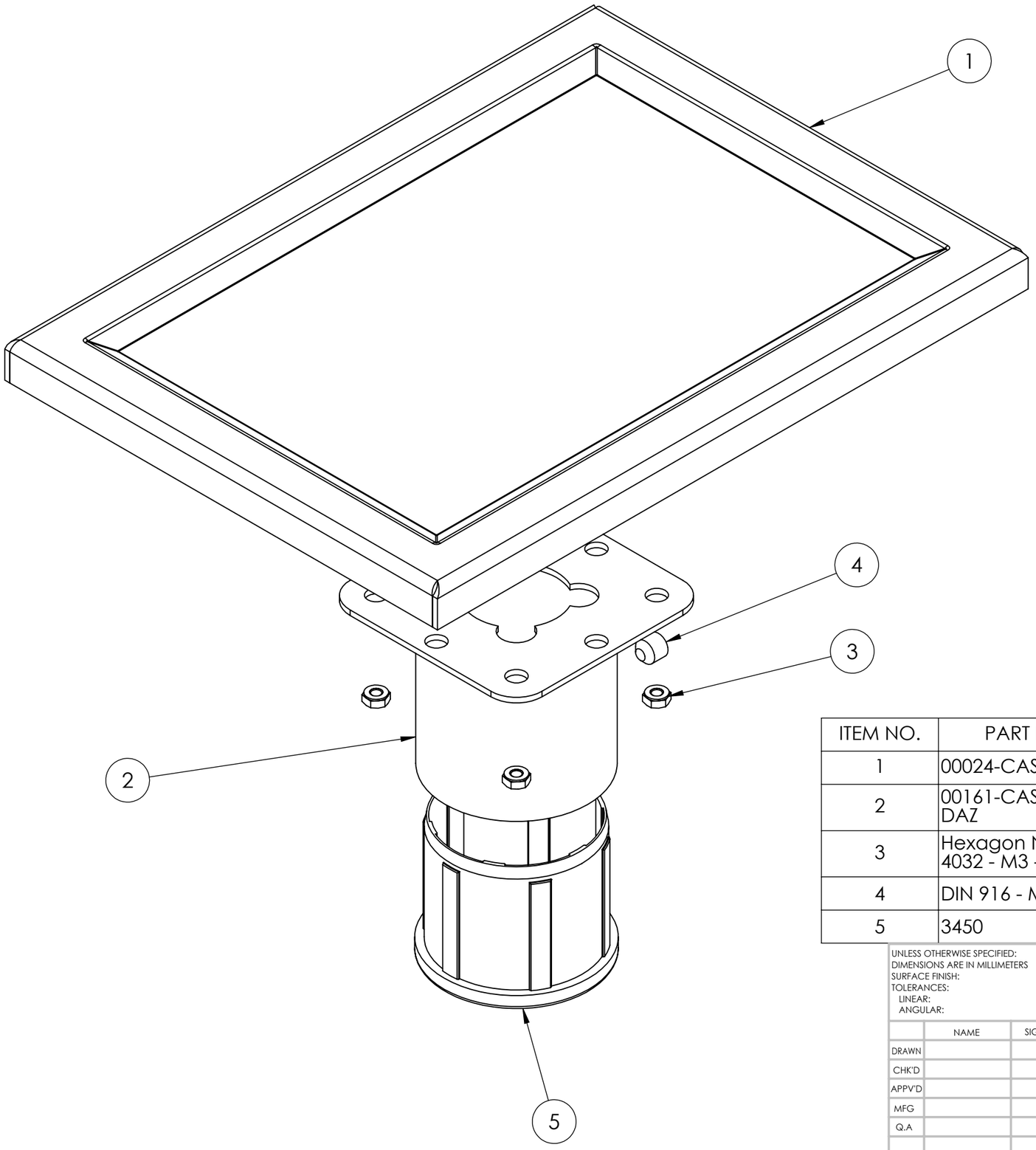

ITEM NO.	PART NUMBER	DESCRIPTION	Staciakampe/QTY.
1	00024-CASH-PLATE-VIR	Cash plate	1
2	00161-CASH-HOLDER-DAZ	Cash plate holder	1
3	Hexagon Nut ISO - 4032 - M3 - W - N		4
4	DIN 916 - M6 x 6-N	DIN 916 - M6 x 6-N	1
5	3450	Plastic bush 38-42-35	1

UNLESS OTHERWISE SPECIFIED:
DIMENSIONS ARE IN MILLIMETERS
SURFACE FINISH:
TOLERANCES:
LINEAR:
ANGULAR:

FINISH:

DEBURR AND BREAK SHARP EDGES

DO NOT SCALE DRAWING

REVISION A-01

	NAME	SIGNATURE	DATE
DRAWN			
CHK'D			
APPV'D			
MFG			
Q.A			

TITLE:

MATERIAL:

WEIGHT:

DWG NO. 00162-CASH-PLATE-44.5-SUR

A3

SCALE:1:2

SHEET 1 OF 1