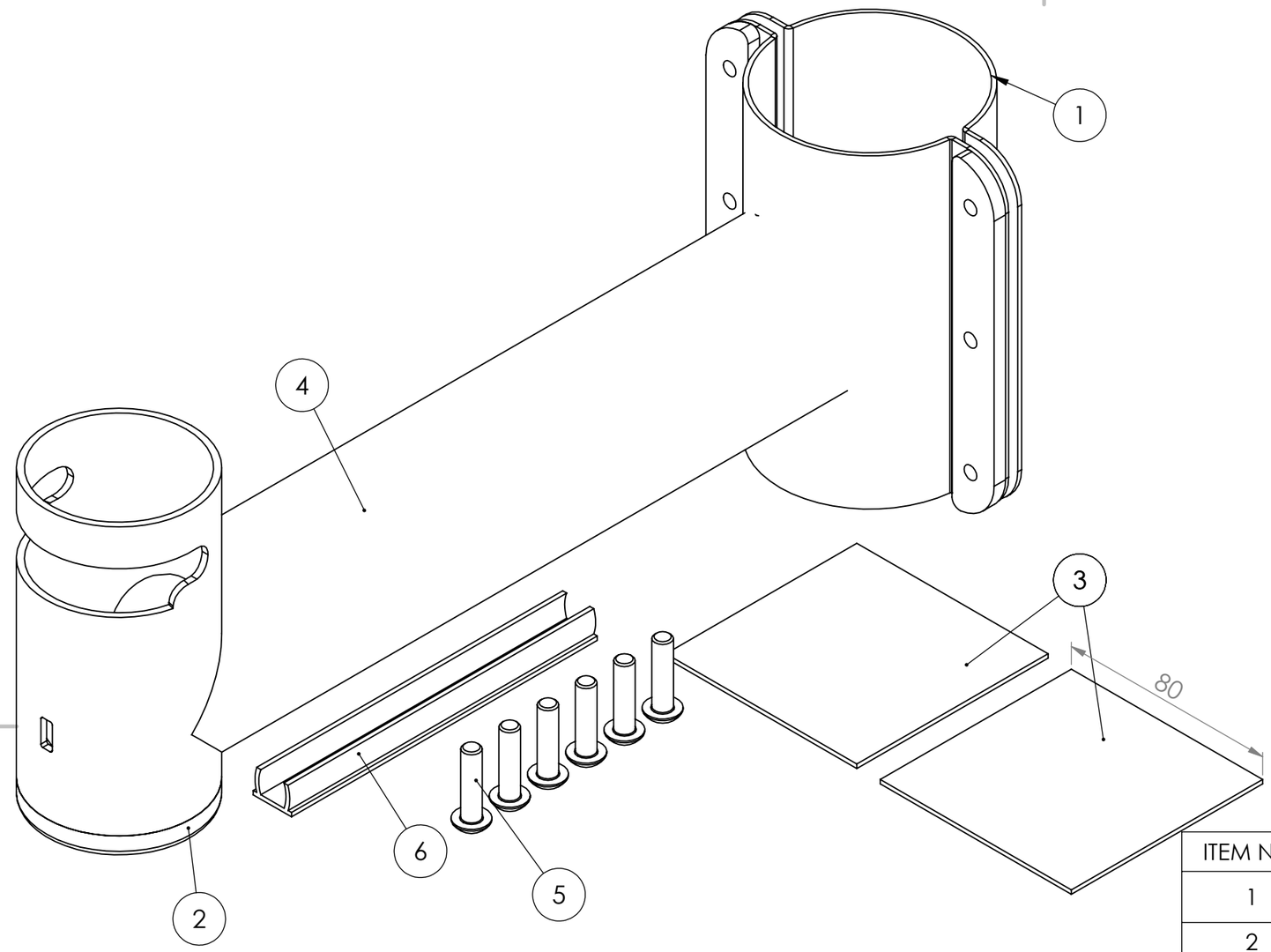

ITEM NO.	PART NUMBER	DESCRIPTION	QTY.
1	08400-STAND-ROUND-BRACKET-45-54-GAM-P		1
2	3372 - D38 KamstisV2	Plastic cork D38	1
3	02200-STICKER-50x50	80 mm	2
4	11842-HAND-PIN-FIX-200-CUTOUT-SPEC-V2-DAZ		1
5	ISO 7380 TX- M4 x 16 - 16C TORX		6
6	5746-05187-BT050101.00.00.002	80 mm	1

UNLESS OTHERWISE SPECIFIED:
DIMENSIONS ARE IN MILLIMETERS
SURFACE FINISH:
TOLERANCES:
LINEAR:
ANGULAR:

FINISH:

DEBURR AND BREAK SHARP EDGES

DO NOT SCALE DRAWING

REVISION A-03

	NAME	SIGNATURE	DATE
DRAWN			2023-06-28
CHK'D			
APPV'D			
MFG			
Q.A			

TITLE:

11843-HAND-PIN-FIX-200-CUTOUT-SPEC-SUR

MATERIAL:

- mm

WEIGHT:

DWG NO.

11843

A3

SCALE:1:5

SHEET 1 OF 1