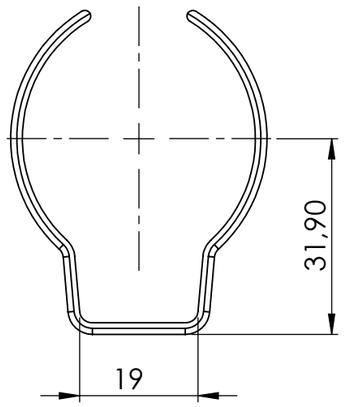

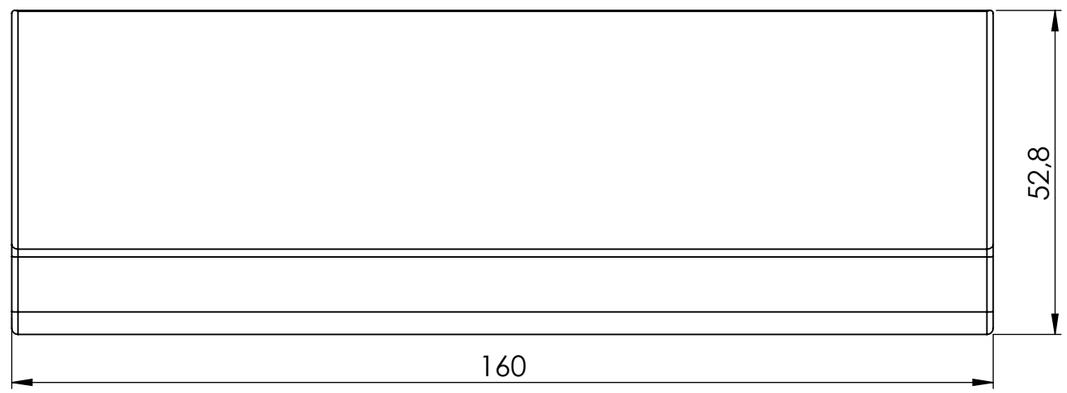

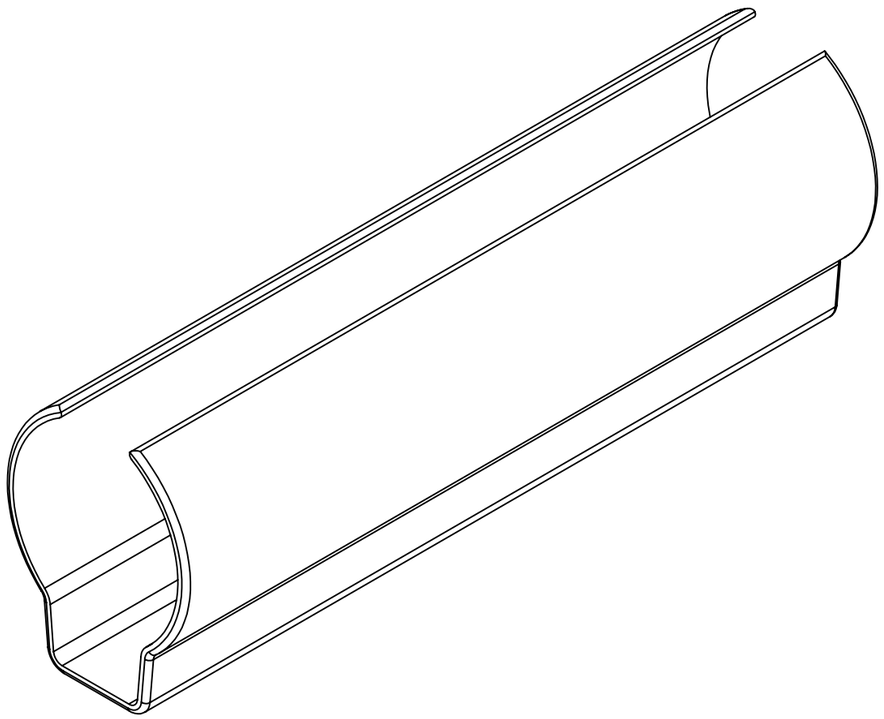

UNLESS OTHERWISE SPECIFIED: DIMENSIONS ARE IN MILLIMETERS SURFACE FINISH: TOLERANCES: LINEAR: ANGULAR:	FINISH:			DEBURR AND BREAK SHARP EDGES	DO NOT SCALE DRAWING	REVISION A-01
	NAME	SIGNATURE	DATE		TITLE: 02051-WIRE-HOLDER-L160	
DRAWN			2017-09-05			
CHK'D						
APPV'D						
MFG						
Q.A				MATERIAL: - mm	DWG NO. 02051	A3
				WEIGHT:	SCALE:1:2	SHEET 1 OF 1